

AQUAPEARL-MINI

OUTDOOR LED MOVING PIXEL BEAM WASH

FEATURES

- Multifunctional Design: Integrates coloring and beam effects into a single moving head light.
- LED Configuration: Equipped with 7 LEDs, each with a power of 60W, featuring a uniform RGBW color mixing system for vibrant colors.
- Individual LED Control: Each LED can be controlled separately, offering diverse and customizable color.
- Optical Lens: The lens can rotate infinitely by 360°, producing vortex and kaleidoscope effects.
- Front Luminous Circle: Enables single-point control for dynamic chase effects.
- Optical Design: Features a unique design with a zoom range from 4° to 50°.
- Built-in Macros: Includes presets for various colors and effects.
- Compact and Lightweight: Sleek appearance, compact structure, small size, and lightweight build.
- Versatile Applications: Ideal for entertainment venues, rentals, TV studios, music festivals, exhibitions, and variety shows.
- IP66 Protection: Suitable for outdoor use, capable of withstanding rain and other weather conditions.

Unit: mm

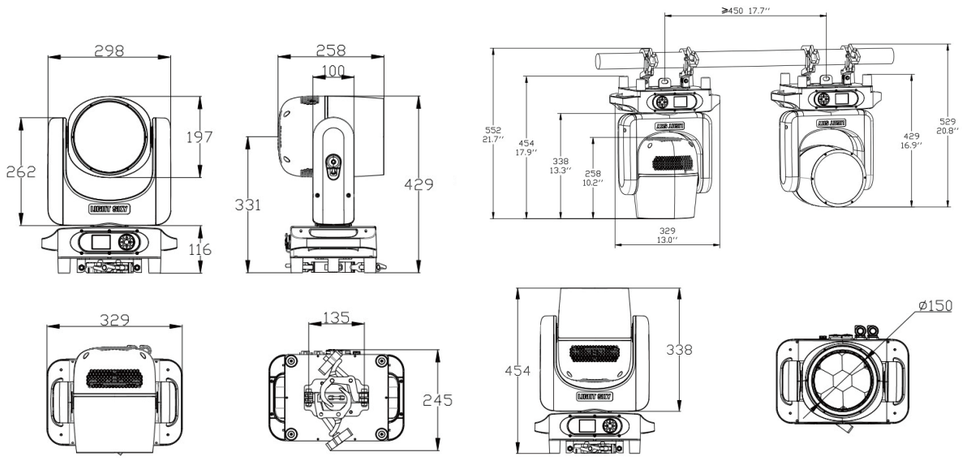

Optics

- Light Source: 7×60W RGBW LED
- Beam Angle: 4° - 32°
- Field Angle: 5° - 50°
- Colour Temperature Output: 2500K - 10000K
- Illuminance : 23,500 lx@5 m
- Lumen Output: 7,100 lm
- Light Source Theory Life Span: 30, 000 h

Effects

- Color Mixing System: Uniform RGBW color mixing system and rainbow effect
- Zoom System: Linear electronic zoom
- Pixel Control: Each LED can be controlled independently for versatile color effects
- Front Ring: Each LED can be controlled independently to create dynamic color changing effects
- Effect Macros: Includes static and dynamic effect macro functions
- Dimming: Electronic dimming with four dimming curves, four dimming frequencies, and four dimming speeds
- Strobe: 1-25Hz electronic strobe and random strobe effects

Control and Programming

- Control channels: 31CH, 55CH, 21CH, 35CH, 28CH (see channel chart for details)
- Protocols: DMX512, RDM, Art-Net
- DMX and RDM connectors: 3 pin or 5 pin XLR IN/OUT
- Display: LCD screen

Software

- Software Upgrade: DMX signal interface , USB interface (optional)
- Temperature Intelligent Control: Ensures LED lifespan through temperature intelligent control

Pan/Tilt Movement

- Pan: 540°, 8-bit / 16-bit precision
- Tilt: 250° , 8-bit / 16-bit precision
- Automatic reset with error correction
- Tilt Lock

Power and Electrical

- Input Voltage Range: AC 100-240V 50/60Hz
- Max Power Consumption: 480W
- Power Factor: 0.9
- Maximum Current of Fixture: 2.4A/220V; 4.8A/110V

Size and Weight

- Product Dimensions: 329mm × 245mm × 454mm
- Net Weight: 12.3 kg
- Carton Dimensions: 410mm × 290mm × 625mm
- Gross Weight: 15.7 kg

Other

- IP Rate: IP66
- Operating Environment: -10℃ ~ 40℃
- Maximum Surface Temperature of Fixture: 80℃

Factory Configuration

- Power Cable: 1 pc (Part No.: F0200030016)
- Signal Cable: 1 pc (Part No.: F0200020008)
- Safety Rope: 2 pcs (Part No.: F0200010010)
- Clamp: 1 set, Compatible with tubes of Ø38-52 mm (Part No.: C0499990057)

Optional Accessories/Packaging

- Flycase Part No.: B0100730001
- Flycase Dimensions(4 in 1): 850mm × 660mm × 725mm
- Flycase Gross Weight(4 in 1): 100.4kg

Illumination Diagram

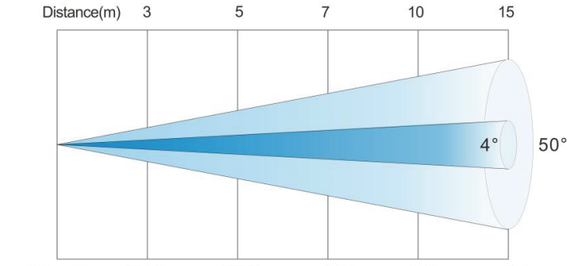

4° Lux R	10342	3723	1899	931	414
G	30478	10972	5598	2743	1219
B	4475	1611	822	403	179
W	36283	13062	6664	3266	1451
RGBW	65278	23500	11990	5875	2677
Diameter (m)	0.22	0.37	0.52	0.74	1.11
50° Lux R	383	138	70	35	15
G	1153	415	212	104	46
B	164	59	30	15	7
W	1353	487	248	122	54
RGBW	3142	1131	577	283	126
Diameter (m)	2.8	4.66	6.52	9.33	13.98

